LEGEND

- ELECTRICAL SERVICES SWITCHBOARD.
- SWITCHBOARD / CONTROL PANEL NOT PROVIDED AS PART OF THE ELECTRICAL SUBCONTRACT.
- SINGLE POWER OUTLET.
- DOUBLE POWER OUTLET.
- USB DOUBLE POWER OUTLET C/W USB CHARGING PORTS
- GAMING / TAB OUTLET BY GAMING ELECTRICIAN.
- SIGNAGE CONNECTION.
- SINGLE PHASE ISOLATOR.
- THREE PHASE ISOLATOR.
- CONDUIT ROUTE.
- FBx ELECTRICAL FLOOR BOX, TYPE AS NOTED.
- AV LED SCREEN AV POWER CONNECTION.
- SPx LIGHTING CONTROL SWITCHPANEL, TYPE x.
- ONE-WAY LIGHT SWITCH.
- CIRCUIT LINE.
- SWITCH LINE.
- DB-x - Py POWER CIRCUIT DESIGNATION. DENOTES DB AND CIRCUIT.
- xx LIGHTING CONTROL CHANNEL REFERENCE.
- ELECTRICAL EQUIPMENT AS NOTED.
- REFER TO DETAIL NOTED FOR THE AREA SHOWN HATCHED. ADDITIONAL OUTLETS & FITTINGS MAY BE SHOWN ON DETAIL.
- Sx Sx: LED JOINERY / CEILING STRIP LIGHT, TYPE AS NOTED.
- E1 E1: GENERAL CEILING RECESSED LED EMERGENCY LIGHT, WHITE.
- E2 E2: GENERAL CEILING RECESSED LED EMERGENCY LIGHT, BLACK.
- E3 E3: GENERAL SURFACE MOUNT LED EMERGENCY LIGHT, WHITE.
- E4 EX E4: EMERGENCY LED EXIT LIGHT, BLACK.
- EX EX: EMERGENCY LED EXIT LIGHT, BLACK.
- PD01 PD01: DECORATIVE SUSPENDED PENDANT.
- PD02 PD02: DECORATIVE SUSPENDED PENDANT.
- PD03 PD03: DECORATIVE SUSPENDED PENDANT.
- PD04 PD04: DECORATIVE SUSPENDED PENDANT.
- PD05 PD05: DECORATIVE SUSPENDED PENDANT.
- PD06 PD06: POOL TABLE LIGHT.
- TL01 TL01: SURFACE TRACK LIGHTS, BLACK.
- WLE WLE: EXISTING WALL LIGHT TO BE RETAINED.
- WL01 WL01: DECORATIVE WALL LIGHT.
- WL02 WL02: DECORATIVE WALL LIGHT.
- WL03 WL03: DECORATIVE WALL LIGHT.
- WL04 WL04: DECORATIVE WALL LIGHT.
- WL10 WL10: EXISTING WALL LIGHT REPLACED WITH UP / DOWN LIGHT.
- WL11 WL11: DECORATIVE WALL LIGHT.
- WL12 WL12: DECORATIVE WALL LIGHT.
- WL13 WL13: PICTURE WALL LIGHT.

LEGEND

- RD01 RD01: RECESSED DOWNLIGHT, BLACK.
- RD02 RD02: RECESSED DOWNLIGHT, WHITE.
- RD03 RD03: RECESSED DOWNLIGHT, BLACK.
- RD04 RD04: RECESSED DOWNLIGHT, WHITE.
- RD05 RD05: KIDS ROOM RECESSED DOWNLIGHT, WHITE.
- RD06 RD06: RECESSED 15W DOWNLIGHT, WHITE.
- RD07 RD07: ADJUSTABLE PICTURE LIGHT.
- RD08 RD08: HIGH LEVEL DOWNLIGHT.
- BL01 BL01: TREE BUD LIGHTING.
- G1 G1: GAMING MACHINE BASE KICK LED STRIP LIGHT.
- FS01 FS01: FESTOON LIGHTS FIXED TO STAINLESS STEEL WIRE SUPPORT.
- GL01 GL01: INGROUND UPLIGHT.
- GL02 GL02: GARDEN PLANTER STAKE LIGHT.
- HL01 HL01: NO LONGER REQUIRED.
- SL01 SL01: EXISTING SPOT LIGHT TO BE REMOVED.
- L1 L1: EXISTING RECESSED DOWNLIGHT.
- L2 L2: EXISTING PENDANT.

EQUIPMENT:

TEST - TEST PUSH BUTTON MOUNTED ON THE DISTRIBUTION BOARD ESCUTCHEON.

RESET - RESET PUSH BUTTON MOUNTED ON THE DISTRIBUTION BOARD ESCUTCHEON.

LAMP - AMBER TEST INDICATING LAMP MOUNTED ON THE DISTRIBUTION BOARD ESCUTCHEON.

Ta - ADJUSTABLE 0-3 HOUR TIMED RELAY.

Tb - 15 MINUTE RUN-ON TIMER TO OPERATE UPON THE RETURN OF MAINS POWER.

Cx - CONTACTOR x.

CRx - CONTROL RELAY x.

Rx - RELAY x.

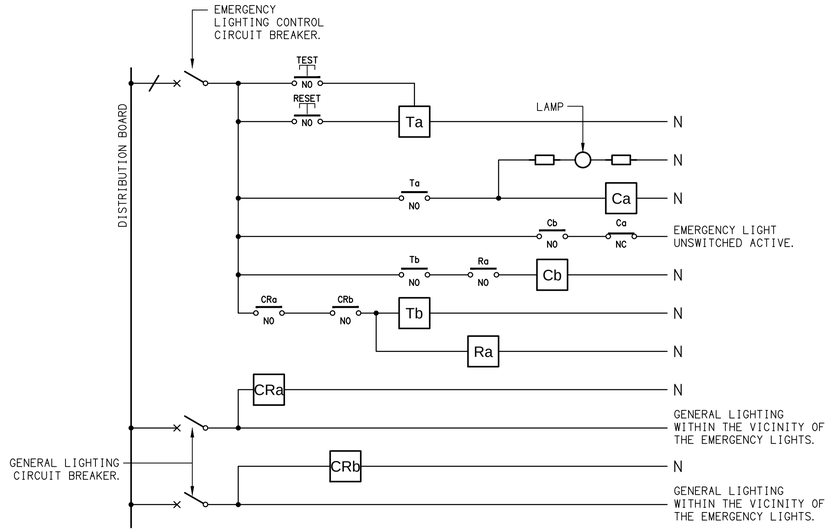

SCHEMATIC

EMERGENCY LIGHTING

NOT TO SCALE

NOTES

1. THE EMERGENCY LIGHT UNSWITCHED ACTIVE / GENERAL LIGHTING SWITCHED ACTIVE CIRCUIT ARRANGEMENT AND CONTROL IS TYPICAL FOR ALL CIRCUITS SUPPLYING EMERGENCY LIGHTS.

2. PROVIDE ADDITIONAL CONTROL RELAYS (CRx) CONFIGURED AS PER CRa AND CRb FOR ALL ADDITIONAL LIGHTING CIRCUITS THAT SUPPLY LIGHTS IN THE VICINITY OF THE EMERGENCY LIGHTS.

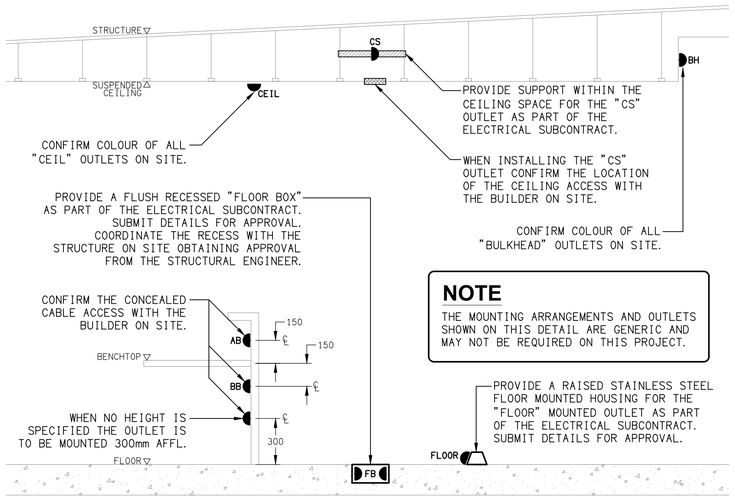

NOTE

THE MOUNTING ARRANGEMENTS AND OUTLETS SHOWN ON THIS DETAIL ARE GENERIC AND MAY NOT BE REQUIRED ON THIS PROJECT.

DETAIL

TYPICAL OUTLET MOUNTINGS

NOT TO SCALE

THE COPYRIGHT OF THIS DRAWING REMAINS THE PROPERTY OF THE ELECTRICAL DESIGN GROUP.

USE FIGURED DIMENSIONS IN PREFERENCE TO SCALE.

ALL DIMENSIONS TO BE VERIFIED ONSITE.

REV:	DESCRIPTION:	DATE:
G	CONSTRUCTION	21/08/2026

ELECTRICAL DESIGN GROUP
ELECTRICAL BUILDING SERVICES CONSULTANTS

BRISBANE: P.O. Box 15 Sherwood Qld 4075
Phone: (07) 3278 4375
Email: brisbane@edg.net.au
Web: www.edg.net.au

ELECTRICAL DESIGN GROUP BRISBANE PTY LTD
ACN 092 710 793

TRADING AS: ELECTRICAL DESIGN GROUP

PROJECT:

JIMBOOMBA TAVERN

SITE ADDRESS:

CORNER MT LINDESAY HIGHWAY & CUSACKS LANE, JIMBOOMBA

SCALE: NOT TO SCALE

SHEET SIZE: AT A1

DRAWING TITLE:

ELECTRICAL SERVICES
LEGEND & DETAILS

PROJECT NO:	DRAWING NO:	REVISION:
C3630a	E01	G